DATE Sept. 25, 2006	OUTLINE DIMENSIONS	MOTOR TYPE: AEHH8N-CF
Cat. #: EP0156C	3-PHASE INDUCTION MOTOR	FRAME NO. 284TC

Pole	HP	kW	Hz	VOLT	Syn. Speed r/min(rpm)
6	15	11	60	230/560	1200

Ins	Rating	Dimension in	Approx Weight	Bearings
F	CONT.	inches	441 lbs	DE: 6311ZZ NDE: 6310ZZ

Totally Enclosed Fan Cooled Type. Squirrel-cage Rotor.

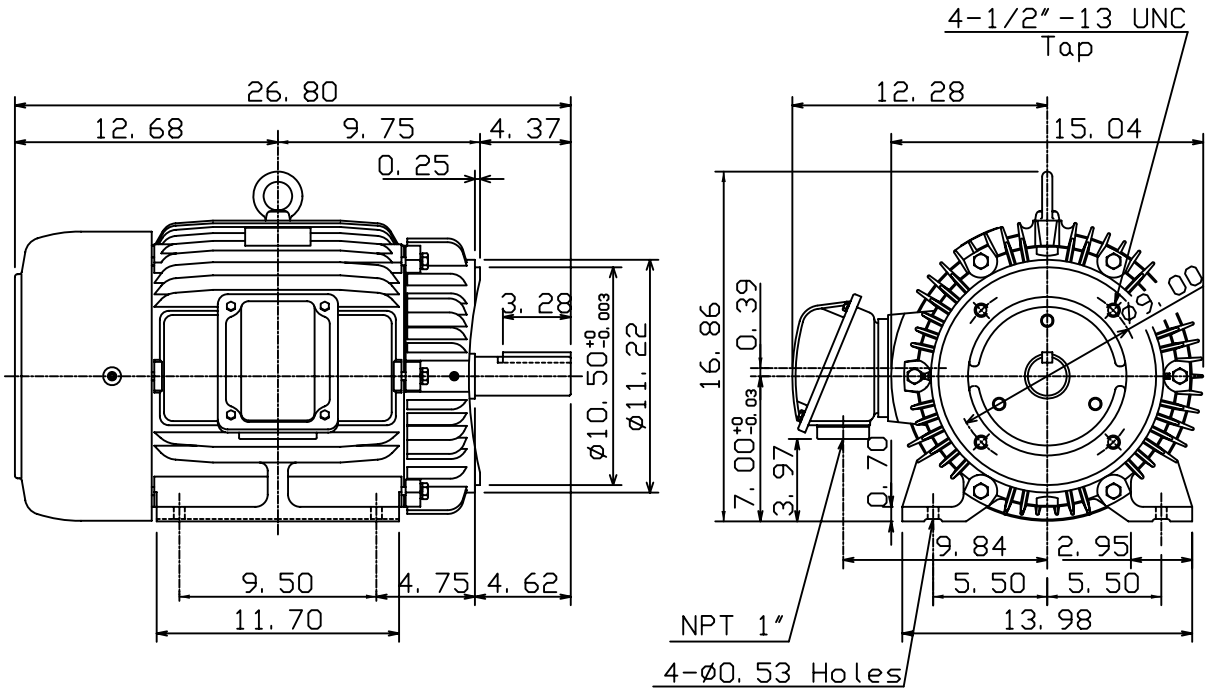

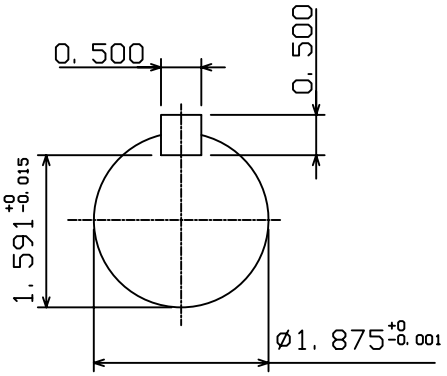

1	01.10.05		K. L. KUO

DWN.	K. L. KUO	11-03-04	TECO Westinghouse	DWG NO.
CHKD.	C. H. KAO	11-04-04		31049J814111
APPD.	M. C. TSAI	11-04-04		